Integrated Freewheels FXR …

RINGSPANN®

for bolting to the face
with sprag lift-off X, torque limiting and optional reverse running function

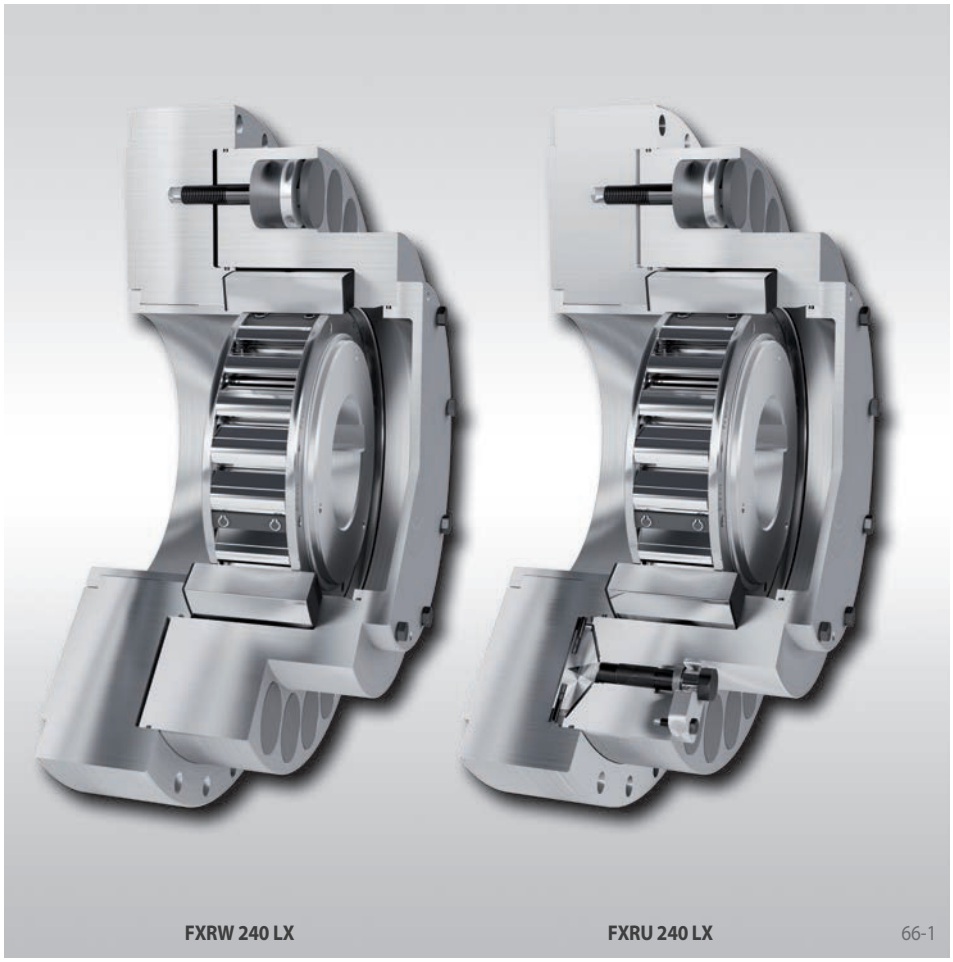

FXRW 240 LX FXRU 240 LX 66-1

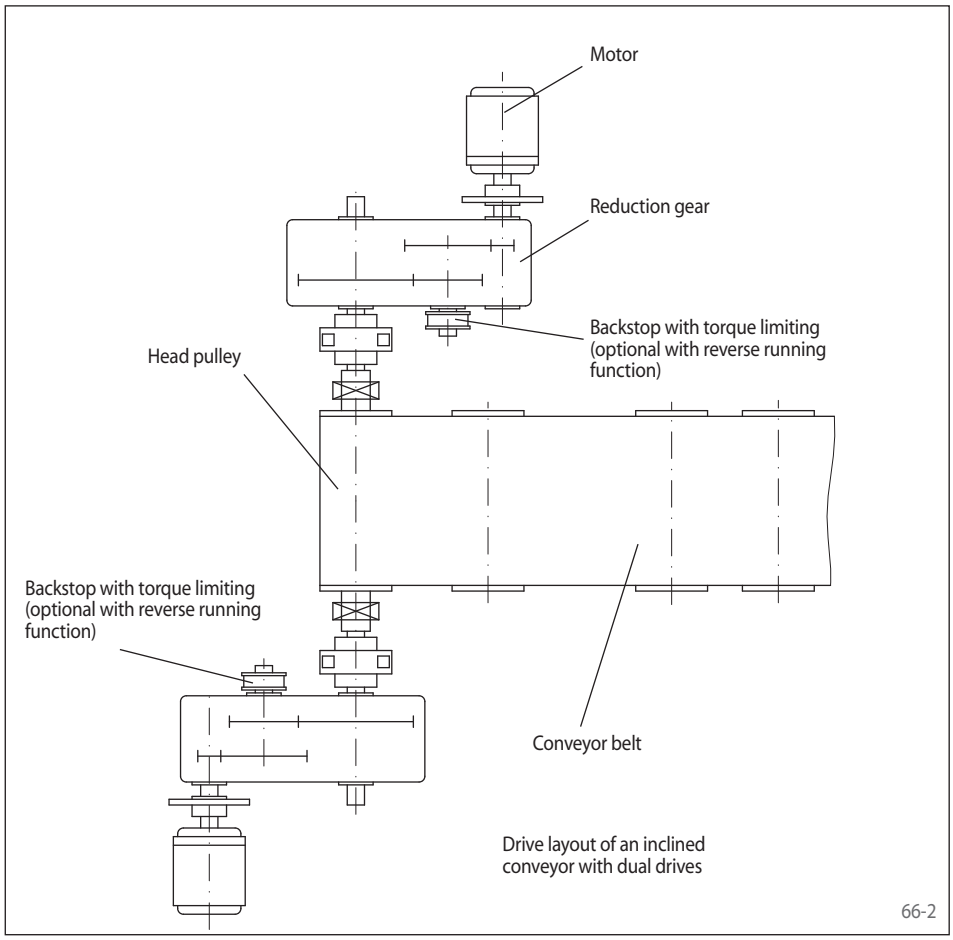

Drive layout of an inclined conveyor with dual drives

66-2

Application as

- Backstop

for continuous conveyor installations with multiple drives in which each drive is equipped with a backstop.

Features

Integrated Freewheels FXR … are sprag freewheels without bearing support and with sprag lift-off X. They consist of the Integrated Freewheels FXM (refer to pages 58 to 63) with additional torque limiter. For reversing operation, they can be optionally equipped with a reverse running function. This allows the conveyor belt to run backwards, for example during maintenance work.

The sprag lift-off X ensures a wear-free freewheeling operation when the inner ring rotates at high speed.

In continuous conveyor installations with multiple drives it is important to consider the problem of the unequal distribution of backdriving torque to the individual drives and backstops. As soon as the installation comes to a standstill, the entire backdriving torque is applied primarily to a single backstop, due to differences in the play and elasticity of the drives involved. In installations equipped with backstops without torque limiters, the individual gearboxes and the corresponding backstops must be designed to accommodate the entire backdriving torque of the conveyor installation in order to ensure safety.

The problem of the unequal distribution of backdriving torque is solved by using backstops FXR … with torque limiting. The torque limiter which is built into the backstop slips temporarily when the specified torque is exceeded until the other backstops engage in succession. In this way, the entire backdriving torque of the conveyor installation is distributed to the individual gearboxes and backstops. Furthermore, dynamic peak torques which occur during the locking process are reduced, thereby protecting the gearboxes against damaging peak torques. For this reason the use of backstops FXR … with torque limiting in continuous conveyor installations with multiple drives enables the application of gearboxes with smaller dimensions.

Advantages

- Protection of gearboxes from overload by unequal load distribution in multiple drives
- Protection of gearboxes from dynamic peak torques during the locking process
- Smaller gearboxes can be used without negatively effecting the safety
- Protection of the backstops, as dynamic peak torques are reduced by temporarily slipping

Integrated Freewheels FXR …

RINGSPANN®

for bolting to the face
with sprag lift-off X, torque limiting and optional reverse running function

Integrated Freewheels FXRW with torque limiting and without release function

This series of backstops with torque limiting is the basic version. The design and the available standard sizes are shown on page 68.

Integrated Freewheels FXRU with torque limiting and with release function

This series is designed in the same way as series FXRW; as an addition, a finely controllable release function is built in. The design, the description of the release function and the available standard sizes are shown on page 69.

The backstops with controllable release function are used if a controlled relaxing of the belt or the unit – perhaps in the case of a jam on the pulley drum – or a limited reverse movement of the conveyor system is required.

Selection torque

The following determination of the selection torque applies to multiple-drives installations in which each drive has the same motor power. Please contact us in case of different motor powers.

If the backdriving torque M_L per drive is known, then the selection torque M_A for the particular backstop should be determined as follows:

$M_A = 1{,}2 \cdot M_L$ [Nm]

If, however, only the nominal power per drive P_0 [kW] is known, then this applies:

$M_A = 1{,}2 \cdot 9550 \cdot F^2 \cdot P_0 / n_{SP}$ [Nm]

In these equiations:

M_A = Selection torque of the particular backstop [Nm]

M_L = $9550 \cdot F \cdot P_L / n_{SP}$ [Nm]

= Static backdriving torque of the load for each drive referring to the particular backstop shaft [Nm]

P_L = Lifting capacity per drive at full load [kW]

= Lifting height [m] multiplied by the load that is being conveyed per second divided by the number of drives [kN/s]

P_0 = Nominal power of motor [kW]

n_{SP} = Speed of backstop shaft [min^{-1}]

F = Selection factor

$$= \frac{\text{Lifting capacity}}{\text{Lifting capacity + Power loss}}$$

After calculating M_A, the size of the particular backstop must be selected in accordance with the catalogue tables in such a way that in all cases this applies:

$M_R \geqq M_A$

M_R = Maximum slipping torque of the particular backstop in accordance with the table values on pages 68 to 69 [Nm]

Approximate values for F:

Type of installation	F	F^2
Conveyor belts, angle up to 6°	0,71	0,50
Conveyor belts, angle up to 8°	0,78	0,61
Conveyor belts, angle up to 10°	0,83	0,69
Conveyor belts, angle up to 12°	0,86	0,74
Conveyor belts, angle up to 15°	0,89	0,79
Screw pumps	0,93	0,87
Ball mills, drying drums	0,85	0,72
Bucket conveyors, elevators	0,92	0,85
Hammer mills	0,93	0,87

In each case, the sum of the slipping torques of the particular backstops must be 1,2 times higher than the static backdriving torque of the installation (also at overload). The torques specified in the tables are maximum values. Lower values can be set upon request. If in doubt, please contact us stating the precise description of the installation and the operating conditions. It is preferable to use the questionnaire on page 106.

Example

Dual-drive system

Motor power per drive: $P_0 = 630$ kW

Type of installation:

Conveyor belt with 8° incline => $F^2 = 0{,}61$

Speed per backstop shaft:

n_{SP} = 360 min^{-1}

Selection torque of the particular backstop:

M_A = $1{,}2 \cdot 9550 \cdot 0{,}61 \cdot 630 / 360$ [Nm]

= 12234 Nm

The following rule applies in all cases:

$M_R \geqq M_A$

=> FXRU or FXRW 140 - 63 MX are the suitable, economical backstop sizes.

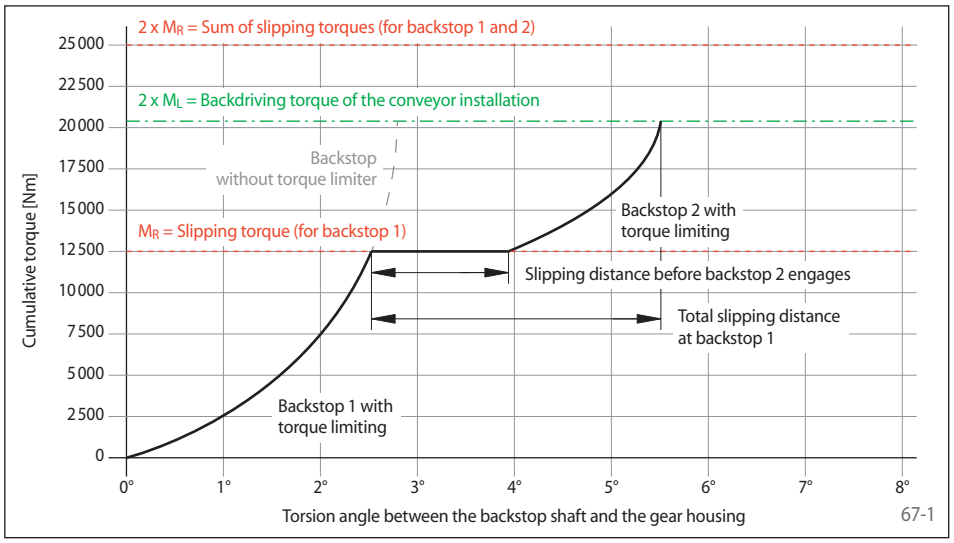

Integrated Freewheels FXRU

RINGSPANN®

for bolting to the face
with sprag lift-off X, torque limiting and release function

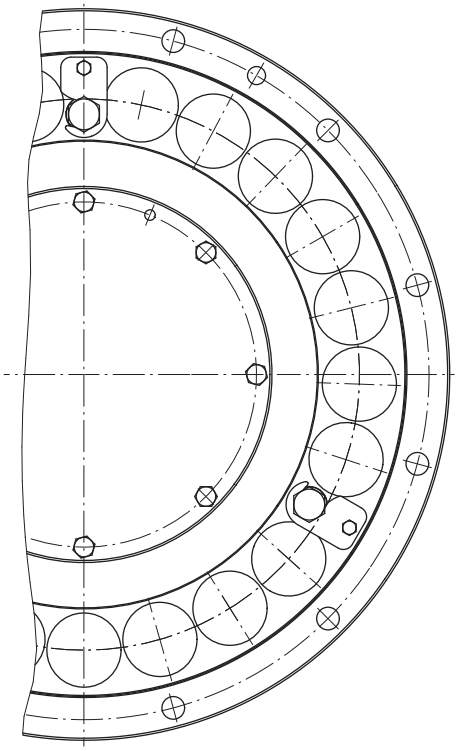

69-1

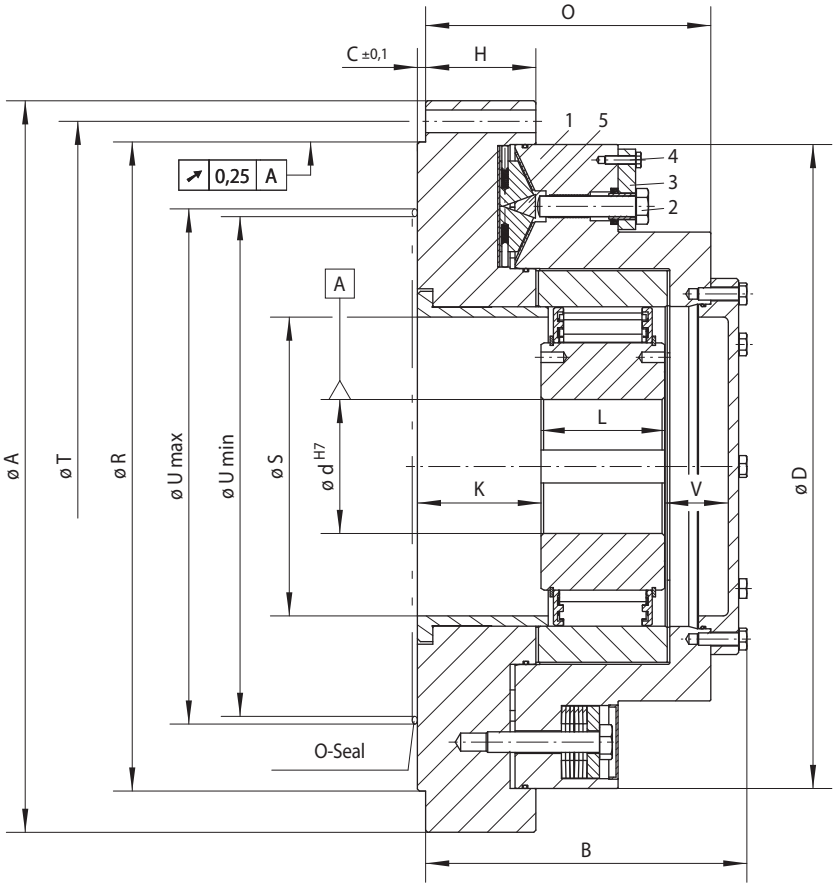

69-2

Backstop

Type with Sprag lift-off X For extended service life using sprag lift-off at high speed rotating inner ring	Dimensions

Freewheel Size	Type	Slipping torque M_R Nm	Sprag lift-off at inner ring speed min^{-1}	Max. speed Inner ring freewheels min^{-1}	Bore d Standard mm	Bore d max. mm	A mm	B mm	C mm	D mm	G** mm	H mm	K mm	L mm	O mm	R mm	S mm	T mm	U*** min. mm	U*** max. mm	V mm	Z**	Weight kg
FXRU 85 - 50	MX	3 300	430	6 000		65	330	176	6	285	M 12	54	67,5	60	151	280	110	308	165	215	38	6	62
FXRU 100 - 50	MX	4 700	400	4 500		80*	350	181	6	305	M 12	59	67,5	70	156	300	125	328	180	240	33	6	74
FXRU 120 - 50	MX	7 300	320	4 000		95	400	192	6	345	M 16	69	77,5	70	167	340	145	373	200	260	34	6	101
FXRU 140 - 63	MX	12 500	320	3 000		110	430	227	6	375	M 16	79	89,5	80	192	375	165	403	220	280	48	6	133
FXRU 170 - 63	MX	19 000	250	2 700	110	130	500	232	6	445	M 16	89	100	80	205	425	196	473	250	425	36	6	197
FXRU 200 - 63	MX	30 000	240	2 100	150	155	555	250	6	500	M 16	99	110	80	223	495	226	528	275	495	43	6	275
FXRU 240 - 96	LX	56 000	220	2 500		185	710	312	8	625	M 20	107	120	120	277	630	290	670	355	630	61	12	526
FXRU 260 - 96	LX	65 000	210	2 250		205	750	327	8	660	M 20	117	130	120	302	670	310	710	375	670	66	12	620
FXRU 290 - 96	LX	90 000	200	2 250		230	850	340	8	735	M 24	127	140	120	302	730	330	800	405	730	65	12	853
FXRU 310 - 96	LX	107 000	195	2 100		240	900	352	10	785	M 24	127	150	120	322	775	355	850	435	775	72	12	1017

Keyway according to DIN 6885, page 1 • Tolerance of keyway width JS10. * Keyway according to DIN 6885, page 3 • Tolerance of keyway width JS10.
** Z = Number of fastening holes for screws G (DIN EN ISO 4762) on pitch circle T. *** Area for O-ring sealing.
Other freewheel sizes upon request.

Torques

The Integrated Freewheels FXRU are supplied with a set slipping torque M_R of the torque limiter. The static backdriving torque M_L of the installation (also in the case of an overload) must under no circumstances achieve the sum of the slipping torques M_R of the provided Integrated Freewheels. The slipping torques M_R specified in the table are maximum values; lower values can be set.

Mounting

The Integrated Freewheels FXRU are without bearing support, therefore it must be ensured that the run out (T.I.R.) between the pilot diameter R and the shaft diameter d does not exceed the value 0,25 mm.

Dimension C applies for the Integrated Freewheel. The centering depth of the customer attachment part must be at least C +0,2 mm. The tolerance of the pilot diameter R of the attachment part must be ISO H7.

The tolerance of the shaft must be ISO h6 or j6.

Release function

The finely controllable release function consists basically of three special screws (2) that are located in the spring pocket (1), safety tabs (3) and wedge systems (5). To release the backstop, first of all the special screws (2) and hexagon screws (4) have to be unscrewed slightly. Then the safety tabs (3) have to be turned outwards and in this position fixed with the hexagon screws (4). The special screws (2) can then be tightened, whereupon, with the aid of the wedge system (5) the release procedure is finely initiated.